Senther

310A-10

General purpose accelerometer

Features

- Rugged design
- High sensitivity
- Hermetic seal
- Case isolated
- ESD protection
- Reverse wiring protection
- EMI / RFI shielded

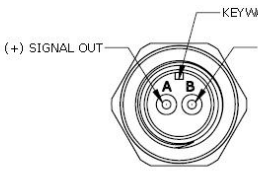

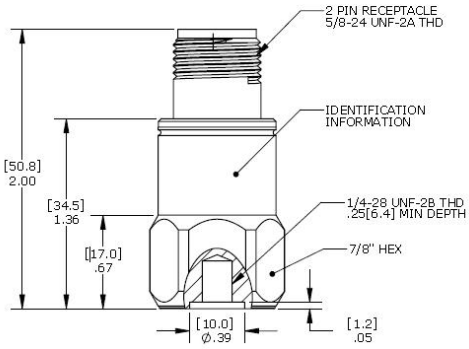

Dynamic

Sensitivity, ±10%, 25°C..... 500 mV/g
Acceleration range ..... 10 g peak
Amplitude nonlinearity..... 1%
Frequency response:
± 5%..... 2 - 4,000 Hz
±1 dB..... 1 - 5,000 Hz
± 3 dB..... 0.5 - 10,000 Hz
Resonance frequency..... 20 kHz
Transverse sensitivity, max..... 5% of axial
Temperature response:
–50°C..... –10%
+120°C..... +10%

Electrical

Power requirement: voltage source ..... 18 - 30 VDC
current regulating diode ..... 2 - 10 mA
Electrical noise, Broadband Spectral(g):
2.5 Hz to 25 kHz..... 200 µg
10 Hz..... 4 µg/√Hz
100 Hz..... 2 µg/√Hz
1000 Hz..... 1 µg/√Hz
Output impedance, max..... 100 Ω
Bias output voltage..... 12 VDC
Grounding..... case isolated,
Internally shielded

Environmental

Temperature range..... –50 to 120°C
Vibration limit..... 100 g peak
Shock limit..... 2,000 g peak
Electromagnetic sensitivity, equiv g, max ..... 70 µg/gauss
Sealing ..... Hermetic
Base strain sensitivity, max..... 0.0002 g/µstrain

Physical

Sensing element design..... PZT ceramic/shear
Weight..... 100 grams
Case material..... 304L stainless steel
Mounting..... 1/4 - 28 UNF
Output connector..... 2 pin, MIL-C-5015
Mating connector..... R6 type
Recommended cabling..... J10 / J9T2A

Accessories

1/4-28 to 1/4-28 mounting stud (or customers specified)
Calibration certificate
Note: Frequency response limits spectral and noise values are typical

Ordering Information

310A-10

- Range in g
- Output type
- Model