Senther 310W-50

Velocity IEPE transmitter

Features

- Wide frequency response
- Rugged design
- High sensitivity
- Hermetic seal
- Case isolated
- ESD protection
- Reverse wiring protection
- EMI / RFI shielded

Dynamic

Sensitivity, ±10%, 25°C..... 3.9 mV/(mm/s)
Acceleration range ..... 1270mm/s Peak
Amplitude nonlinearity..... 1%
Frequency response:
±1 dB..... 3 - 3,500 Hz
± 3 dB..... 2 - 6,000 Hz
Resonance frequency..... 32 kHz
Transverse sensitivity, max..... 5% of axial
Temperature response:
–50°C.....–10%
+120°C..... +10%

Electrical

Power requirement: voltage source ..... 18 - 30 VDC
current regulating diode ..... 2 - 10 mA
Electrical noise, Broadband Spectral(g):
2.5 Hz to 25 kHz..... 3µm/s
Output impedance, max..... 100Ω
Bias output voltage..... 12 VDC
Grounding..... case isolated, Internally shielded

Environmental

Temperature range.....–40 to 120°C
Vibration limit..... 500 g peak
Shock limit..... 5,000 g peak
Electromagnetic sensitivity, equiv g, max ..... 70 µg/gauss
Sealing ..... Hermetic
Base strain sensitivity, max..... 0.0002 g/µstrain

Physical

Sensing element design..... PZT ceramic/shear
Weight..... 80 grams
Case material..... 316L stainless steel
Mounting..... 1/4 - 28 UNF
Output connector..... 2 pin, MIL-C-5015
Mating connector..... R6 type
Recommended cabling..... J10 / J9T2A

Accessories

1/4-28 to M6 mounting stud (or customers specified)
Calibration certificate
Note: Frequency response limits spectral and noise values are typical

Certification

Intrinsic Safety Cert ified: Ex ia IIC T4

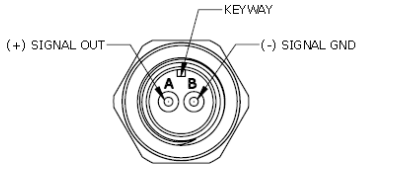

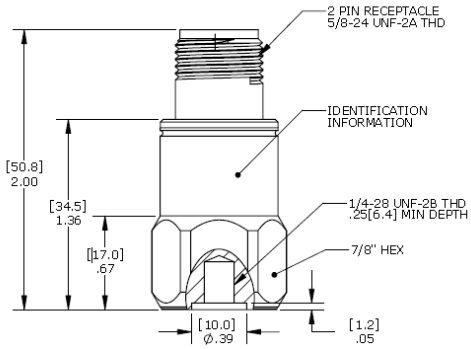

Ordering Information

310W-50

- Range in inch
- Output type
- Model