Senther

341A-80

Side integrated cable industrial accelerometer

Features

- wide frequency response
- Rugged design
- High sensitivity
- Hermetic seal
- Case isolated
- ESD protection
- Water proof
- EMI / RFI shielded

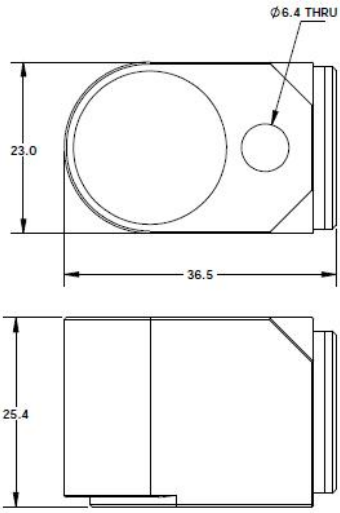

Dynamic

Sensitivity, ±10%, 25°C..... 100 mV/g
Acceleration range ..... 80 g peak
Amplitude nonlinearity..... 1%
Frequency response:
±1 dB..... 1 - 6,000 Hz
± 3 dB..... 0.3 - 8,000 Hz
Resonance frequency..... 25 kHz
Transverse sensitivity, max..... 5% of axial
Temperature response:
–50°C..... –10%
+120°C..... +10%

Electrical

Power requirement: voltage source ..... 18 - 30 VDC
current regulating diode ..... 2 - 10 mA
Electrical noise, Broadband Spectral(g):
2.5 Hz to 25 kHz..... 500 µg
10 Hz..... 10 µg/√Hz
100 Hz..... 5 µg/√Hz
1000 Hz..... 2.5 µg/√Hz
Output impedance, max..... 100 Ω
Bias output voltage..... 12 VDC
Grounding..... case isolated,
Internally shielded

Environmental

Temperature range..... –50 to 120°C
Vibration limit..... 500 g peak
Shock limit..... 5,000 g peak
Electromagnetic sensitivity, equiv g, max ..... 70 µg/gauss
Sealing ..... Hermetic
Base strain sensitivity, max..... 0.0002 g/µstrain

Physical

Sensing element design..... PZT ceramic/shear
Weight(W/O cable)..... 110 grams
Case material..... 304L stainless steel
Mounting..... M6 mounting screw
Output cable..... 2 wire cable
Red_Output
Black_GND

Accessories

M6 mounting screw (or customers specified)
Calibration certificate
Note: Frequency response limits spectral and noise values are typical

Ordering Information

341A-80

- Range in g
- Output type
- Model