Senther 310AT-80

Accelerometer with thermal output

Features

- Rugged design
- High sensitivity
- Hermetic seal
- Case isolated
- ESD protection
- Temperature output
- EMI / RFI shielded

Dynamic

Sensitivity, ±10%, 24°C ..... 100 mV/g
Acceleration range ..... 80 g peak
Amplitude nonlinearity 1%
Frequency response:
± 1dB ..... 1 - 10,000 Hz
± 3dB ..... 0.3 - 13,000 Hz
Resonant frequency ..... 32 kHz
Transverse sensitivity, max ..... 5% of axial
Temperature response:
–55°C ..... –10%
+125°C ..... +10%

Electrical

Power requirement: voltage source ..... 18 - 30 VDC
current regulating diode ..... 2 - 10 mA
Electrical noise, Broadband Spectral (g):
2.5 Hz to 25 kHz ..... 200 µg
Output impedance, max ..... 100 Ω
Bias output voltage ..... 12±2 VDC
Grounding ..... case isolated, internally shielded
Warm-up time(90% of bias)..... <1 s

Environmental

Temperature range ..... –55 to 125°C
Vibration limit ..... 500 g peak
Shock limit ..... 5,000 g peak
Electromagnetic sensitivity, equiv g, max ..... 70 µg/gauss
Sealing ..... Hermetic
Base strain sensitivity, max ..... 0.0002 g/µstrain

Physical

Sensing element design ..... PZT ceramic/shear
Temperature element..... PT1000
Weight ..... 80 grams
Case material ..... 316L stainless steel
Mounting ..... 1/4 - 28 UNF
Output connector 5 Pins-M12
Recommended cabling 18A

Accessories

1/4-28 to M6 mounting stud (or customer specified)
Calibration certificate

Note: Frequency response limits spectral and noise values are typical

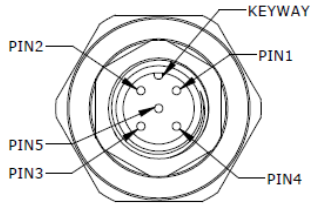

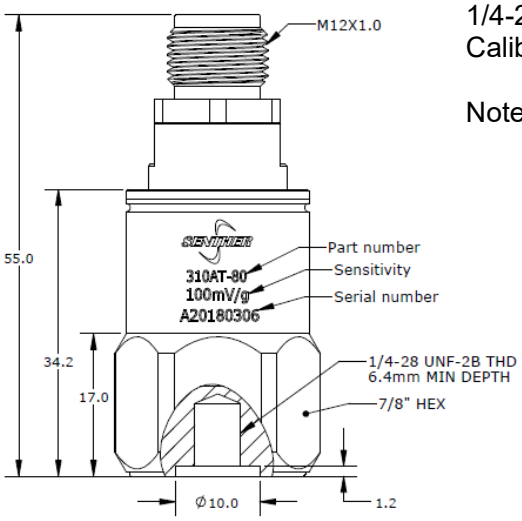

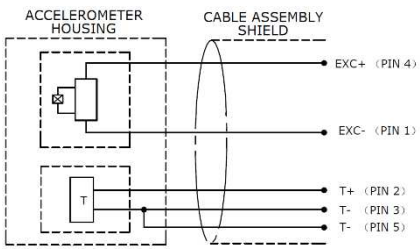

Ordering Information

310AT-80

- Range in g
- Output type
- Model