# Senther 322T-5-LF

## Lightning protection bi-axial accelerometer

### Features

- Low frequency response
- Bi-axial output
- High sensitivity
- Temperature output
- Hermetic seal
- Lightning protection
- ESD protection
- EMI / RFI shielded

### Dynamic

Sensitivity, ±10%, 25°C..... 1000 mV/g
Acceleration range ..... 5 g peak
Amplitude nonlinearity..... 1%
Frequency response:
± 5%..... 0.5 - 2,000 Hz
±1 dB..... 0.3 - 3,000 Hz
± 3 dB..... 0.1 - 5,000 Hz
Resonance frequency..... 24 kHz
Transverse sensitivity, max..... 5% of axial
Temperature response:
–50°C..... –5%
+120°C..... +5%

### Electrical

Power requirement: voltage source ..... 18 - 30 VDC
current regulating diode ..... 2 - 10 mA
Electrical noise, Broadband Spectral(g):
2.5 Hz to 25 kHz..... 100 µg
10 Hz..... 2 µg/√Hz
100 Hz..... 1 µg/√Hz
1000 Hz..... 0.5 µg/√Hz
Output impedance, max..... 100 Ω
Bias output voltage..... 12 VDC
Grounding..... Case isolated, Internally shielded

### Environmental

Temperature range..... –50 to 120°C
Vibration limit..... 100 g peak
Shock limit..... 2,000 g peak
Electromagnetic sensitivity(max.) ..... 70 µg/gauss
Sealing ..... Hermetic
Base strain sensitivity, max..... 0.0002 g/µstrain
Dielectric Withstand Voltage..... 2500V (AC)

### Physical

Sensing element design..... PZT ceramic/shear
Temperature element..... PT1000
Weight..... 250 grams
Case material..... 304L stainless steel
Mounting..... M5 screw
Output connector..... 5 pin
Recommended cabling..... 19

### Accessories

M5 mounting screw (or customers specified)
Calibration certificate
Note: Frequency response limits spectral and noise values are typical

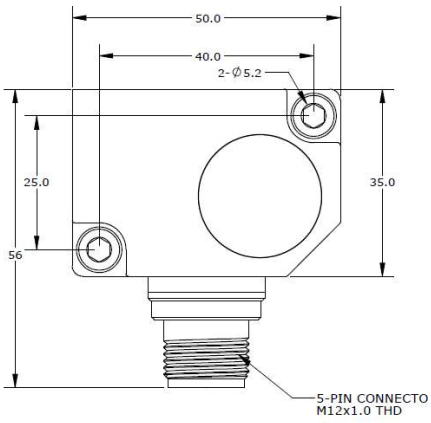


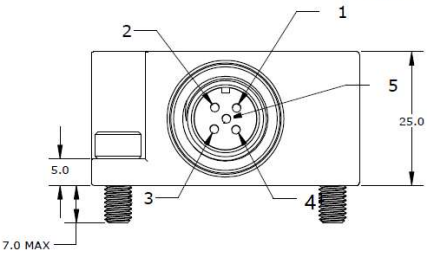


### Ordering Information

322T-5-LF

- Low frequency option
- Range in g
- Temperature output
- Model