Senther 512A-50

Single axial IEPE accelerometer

Dynamic

Sensitivity, ±10%, 25°C..... 100 mV/g
Acceleration range .....50 g peak
Amplitude nonlinearity..... 1%
Frequency response:
± 5%.....1 - 7,000 Hz
±1dB.....1 - 10,000 Hz
± 3 dB.....0.5 - 15,000 Hz
Resonance frequency.....40 kHz
Transverse sensitivity, max.....5% of axial
Temperature response:
–50°C.....–10%
+120°C..... +10%

Electrical

Power requirement: voltage source .....18 - 30 VDC
current regulating diode .....2 - 10 mA
Electrical noise, Broadband Spectral(g):
1 Hz to 10 kHz..... 500µg
Output impedance, max..... 100Ω
Bias output voltage..... 10 VDC
Grounding.....Case grounded

Environmental

Temperature range.....–50 to 125°C
Vibration limit..... 1000 g peak
Shock limit..... 5,000 g peak
Electromagnetic sensitivity, equiv g, max ..... 70 µg/gauss
Sealing .....Hermetic
Base strain sensitivity, max.....0.0002 g/µstrain

Physical

Sensing element design..... PZT ceramic/shear
Weight..... 7 grams
Case material..... Stainless Steel
Output connector.....10-32

Accessories

Mounting stud:10-32(-E)
Mating cable with BNC output
Calibration certificate
Note: Frequency response limits spectral and noise values are typical

Features

- Miniature Size
- Adhesive or stud mounting
- Hermetic seal
- Annular shear mode
- Wide temperature range
- Wide frequency response

Application

- Vibration monitoring
- Shock testing
- Road testing
- Modal analysis
- Aircraft testing

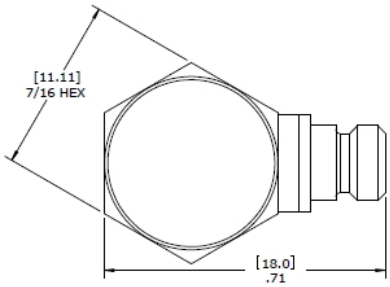

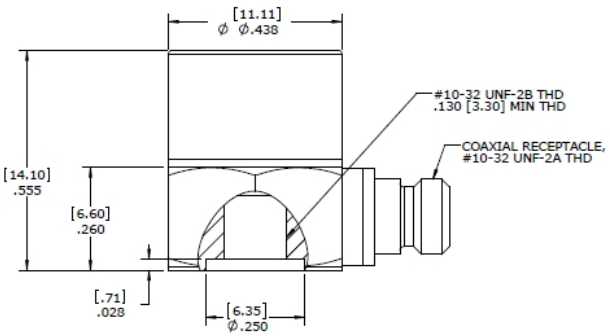

Ordering Information

512A-50-E

- Mounting stud
- Range in g
- Output type
- Model