Senther 711A-500

Miniature IEPE accelerometer

Dynamic

Sensitivity, ±10%, 25°C..... 10 mV/g
Acceleration range ..... 500 g peak
Amplitude nonlinearity..... 1%
Frequency response:
± 10%..... 1 - 8000 Hz
± 3 dB..... 0.5 - 10000 Hz
Resonant frequency..... 48 kHz
Transverse sensitivity, max..... 5% of axial
Temperature response:
–55°C..... –10%
+125°C..... +10%

Electrical

Power requirement: voltage source ..... 18 - 30 VDC
current regulating diode ..... 2 - 10 mA
Electrical noise, Broadband Spectral (g):
2 Hz to 20 kHz..... 3.2 mg
Output impedance, max..... 100 Ω
Bias output voltage..... 8 - 12 VDC
Grounding..... Case grounded

Environmental

Temperature range..... –55 to 125°C
Vibration limit..... 1000 g peak
Shock limit..... 5000 g peak
Electromagnetic sensitivity, equiv g, max ..... 90 µg/gauss
Sealing IP68
Base strain sensitivity, max..... 0.0002 g/µstrain

Physical

Sensing element design..... Ceramic/shear
Weight..... 0.9 grams
Case material..... Titanium
Output connector..... M3

Accessories

Mating cable with BNC output
Calibration certificate

Note: Frequency response limits spectral and noise values are typical

Features

- Miniature size
- Adhesive mounting
- Hermetic seal
- Annular shear mode
- Wide frequency response
- Shock duration

Application

- Vibration monitoring
- Shock testing
- Satellite testing
- Modal analysis
- Aircraft testing

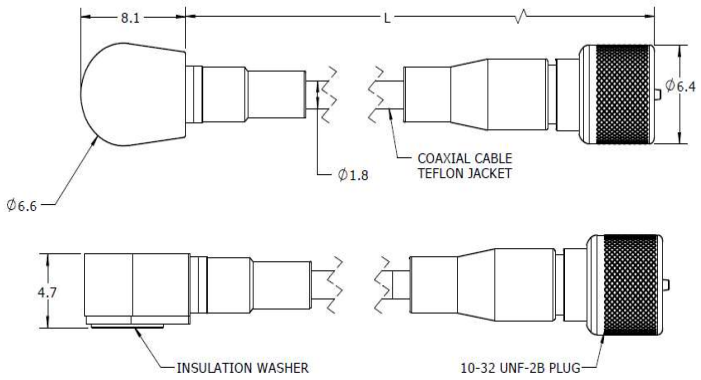

Ordering Information

711A-500

- Range in g
- Output type
- Model