Senther 340AT-80

Ex-ATEX accelerometer & thermometer

Features
- Ex-ATEX
- Corrosion resistant
- Hermetic seal
- Case isolated
- ESD protection
- Reverse wiring protection

Dynamic
Sensitivity, ±10%, 25°C..... 100 mV/g
Acceleration range ..... 80 g peak
Amplitude nonlinearity..... 1%
Frequency response:
±1 dB..... 1 - 8,000 Hz
± 3 dB..... 0.4 - 14,000 Hz
Resonance frequency..... 32 kHz
Transverse sensitivity, max..... 5% of axial
Temperature response:
–50°C..... –10%
+120°C..... +10%

Electrical
Power requirement: voltage source ..... 18 - 30 VDC
current regulating diode ..... 2 - 10 mA
Residual noise, 2.5 Hz to 25 kHz..... 2 mg
Output impedance, max..... 100 Ω
Bias output voltage..... 12 VDC
Grounding..... Case isolated

Temperature output
Sensitivity, typical..... 10mV/°C
Measure range..... –40 to 125°C
Temperature accuracy……..... ±1°C

Environmental
Temperature range..... –50 to 125°C
Vibration limit..... 500 g peak
Shock limit..... 5,000 g peak
Electromagnetic sensitivity, equiv g, max ..... 70 µg/gauss
Sealing ..... Hermetic
Base strain sensitivity, max..... 0.0002 g/µstrain

Physical
Sensing element design..... PZT ceramic/shear
Weight(W/O cable)..... 105 grams
Case material..... 316L stainless steel
Mounting..... 1/4 - 28 UNF
Output connector..... 3 pin, MIL-C-5015
Mating connector..... 3 pin plug
Recommended cabling..... 20A

Accessories
Calibration certificate

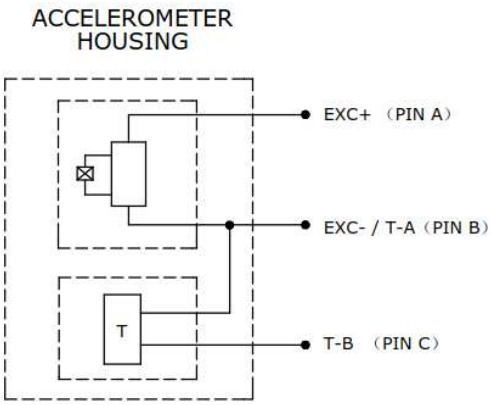

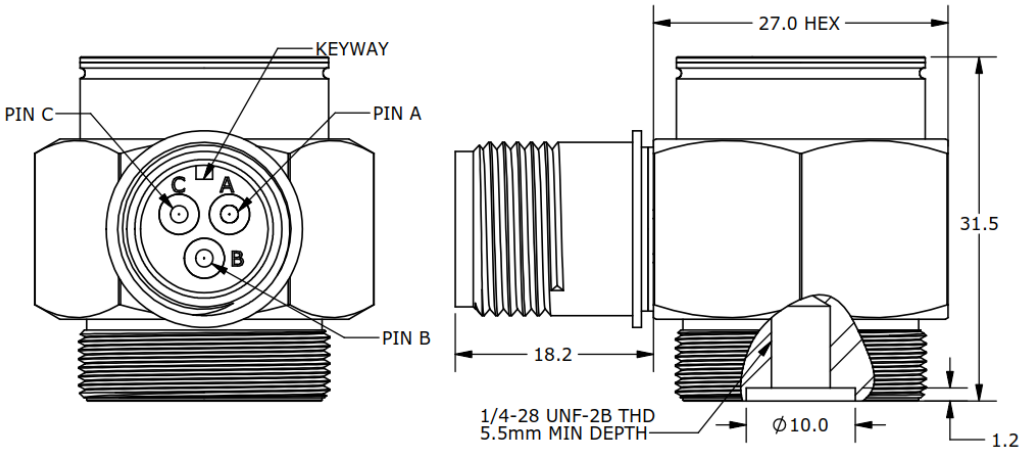

Ordering Information
340AT-80
- Range in g
- Output type
- Model